東元空調

舒適・節能・健康・環保

TECO

Driving and Connecting Globally

High-efficiency R-134a Centrifugal Water Chiller
高效率 R-134a 離心式冰水機

"The Highest Level" High-efficiency R-134a Centrifugal Water Chiller

"世界最高水平" 的高效率R-134離心式冷水機

Construction

High-efficiency R-134a Centrifugal Water Chiller Construction
高效率 R-134a 離心式冰水機結構

Capacity Control Device (容量控制裝置)
- Continuous 100~20% capacity control (100~20%無級容量調節)
- Hot gas bypass line (熱氣旁通管線)

Control Panel (控制箱)
- Automatic capacity control (自動容量調節裝置)
- Fully automatic operation (全自動運行)
- Color / Touch Screen Display (彩色觸摸屏)

Compressor (壓縮機)
- High-efficiency 2-stage compression (高效率2段壓縮)
- Closed shroud impeller (採用 Closed Shroud Impeller)
- Vaneless diffuser (採用 Vaneless Diffuser)

Motor (馬達)
- High-efficiency motor (採用高效電機)
- Refrigerant cooled system (冷媒冷卻方式)

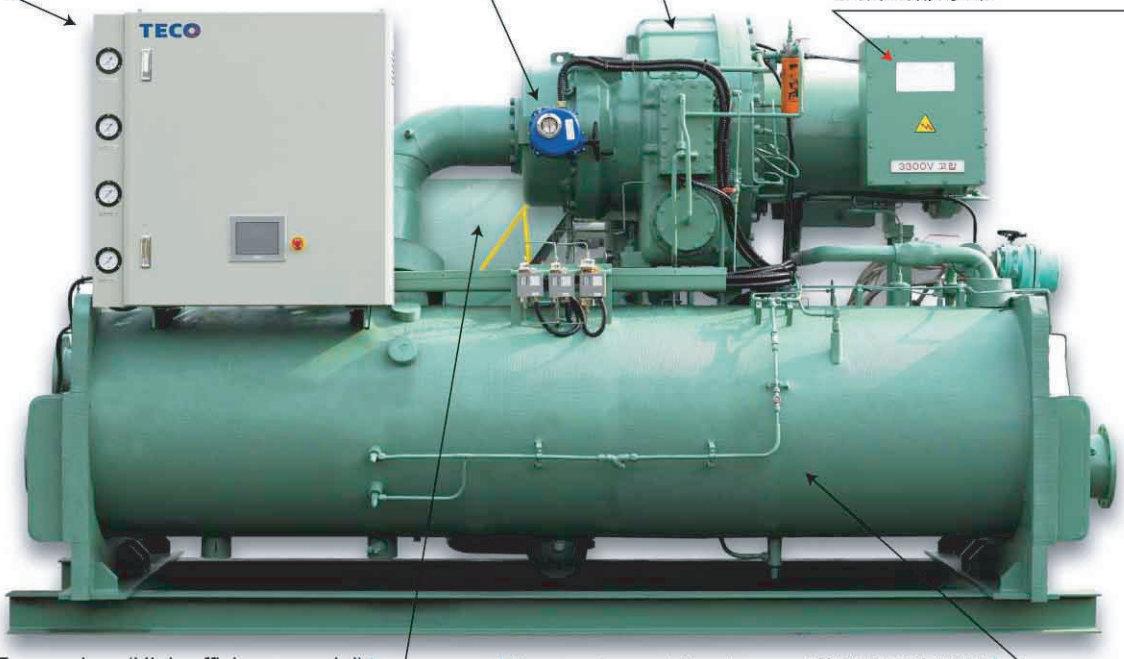

Economizer (High-efficiency model)
節能器 (高效率型)

Evaporator and Condenser (蒸發器及冷凝器)
- The newest high-performance heat transfer tube 採用最新的高能效熱傳管
- Sub-cooling system (Condenser) (採用 Sub-Cooling System (冷凝器)

Model Nomenclature (機型表示方法)

TR — E 1000 H 1

- 1: Version No. (版本型號)
- H: Refrigerant : R-134a (冷媒 : R-134a)
- 1000: Cooling Capacity (Refer to the standard specification) 制冷量(參照標準規格表)
- E: Use (用途)
  - E : High-performance model (高效率型)
  - G : Standard-performance model (標準效型)

Features of the High-efficiency R-134a Centrifugal Water Chiller
高效率 R-134a 離心式冰水機的特點

採用高效2段壓縮機以及最新型的高性能傳熱管，
進而達到節約能源的

Finetec Century High-efficiency R-134a Centrifugal Water Chiller has realized energy saving through implementation of a High-efficiency 2-stage compressor and the most up-to-date heat transfer tube (Finetec Century 高效率 R-134a 離心式冰水機)

COP	kW/RT
6.1	0.57

Environmental -friendly Centrifugal Water Chiller (環保的離心式冰水機)

We have significantly decreased the amount of CO^2 production through the realization of a High-efficiency model and successful application of a refrigerant, R-134a, which is completely toxin-free with zero ozone depletion potential.

採用臭氣破壞指數為零，並且無毒的冷媒R-134a，實現高效運行，進而大量減少 CO_2 的排放。

Design Optimization of Impeller Using Numerical Analysis of Flow Passage
通過內部流路流體分析，創造的最佳設計

We have greatly increased the efficiency of the compressor by improving the impeller flow passage and by applying hydro-dynamically optimum rpm. In addition, we have utilized a super-precision aluminum alloy for our impeller, which possesses an ideal 3D shape that had been carefully reviewed through detailed analysis of structure and flow.

We have also adopted an ideal flow passage structure through detailed numerical analysis of CFD fluid flow for each part and combined flow passage that make up the paths of refrigerant such as the impeller, diffuser, de-swirler, and casing.

通過改善葉輪的流路及採用最佳的轉數，進而增加壓縮機的效率。通過對結構以及熱流分析的技術製作而成的具有3種形態的超精密鋁合金葉輪，進而實現高效率運轉。

通過形成冷媒流路的葉輪、擴散器、渦流器和外殼等各種配件，以及對組合流路的CFD熱流分析，進而選擇最理想的流路結構。

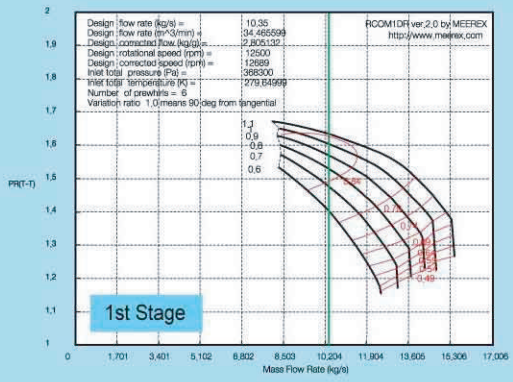

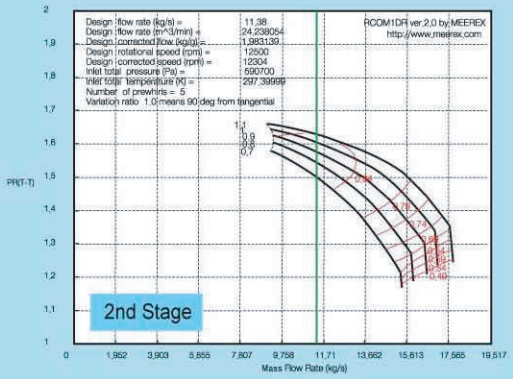

Compressor Performance Prediction

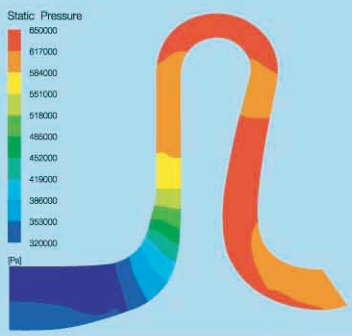

Meridional Static Pressure Contour (1st Stage)

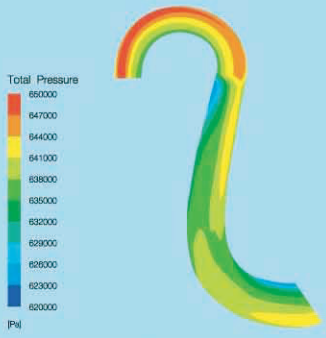

Total Pressure Contour at Return-bend and Channel

Features of the High-efficiency R-134a Centrifugal Water Chiller
高效率 R-134a 離心式冰水機的特點

High-efficiency (高效率)

- We have achieved energy saving of 6~8% over the previous 1-stage cycle model by adopting an economizer-based 2-stage compression system.
  配備節能器的2段壓縮方式，比1段壓縮方式節能源約6~8%(高效型)。
- High-efficienecy Closed Shroud Impeller (採用高效的 Closed Shroud Impeller。)
- Realized High-efficiency cycle and system through application of a sub-cooling system and a precise control of expansion valve which carefully considered the effect of part load.
  採用Sub-Cooling System 以及採用電子膨脹閥在部分負載時的精密控制特性，而實現高效率。
- The newest and energy-saving high-performance heat transfer tube (採用最新的節能、高性能傳熱管)
- High-efficiency electric motor. (採用高效的電機)
- The high-efficiency model can expect to achieve 30% curtailment of operation cost when compared with the previous R-123 turbo chiller. On the other hand, the standard efficiency model can achieve 20% curtailment.
  高效型冰水機比R-123型離心式冰水機減少約30%的運行費，比標準型冰水機減少約20%的運行費。

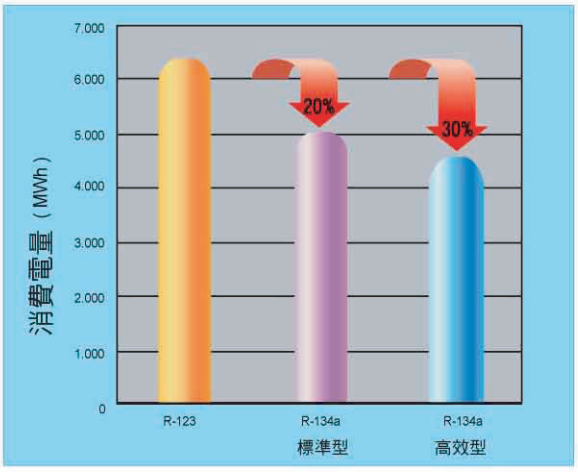

Control of Wide Range of Capacities（廣範圍容量控制）

- Continuous operation is possible from 100%~20% through efficient associated control of inlet guide vane, movable diffuser, and hot gas bypass.

  高效率的聯動控制進氣導葉，可變分配器及熱氣旁通技術，可使冰水機在100%~20%無段容調持續運行。

Safe Performance Guaranteed from Application of High-pressured Refrigerant
採用高壓冷媒，確保障效率

R-134a centrifugal water chiller is able to operate a duration period by extending the life of the chiller through implementation of a high-pressured design which exceeds the atmospheric pressure. No bleeding devices are necessary as the chiller is completely free from the influx of any non condensates, which has lowered the chiller efficiency in the old low-pressure centrifugal water chillers (R-11, R-123). R-134a guarantees the chiller long-life performance as it can prevent the insulation breakdown of the motor which may arise from pollution of anti-condensing substances.

離心式冷水機採用高於大氣壓的R-134a高壓冷媒，使冰水機發揮持續性的性能，因此可延長冰水機的壽命。絕不會出現在低壓冷媒(R-11, R-123) 離心式冰水機中出現的引起效率低下的不冷凝約性質流入現象。無需抽氣裝置，絕無由不冷凝物質引起的污染，可防止馬達的絕緣損壞，進而保障電動機的壽命。

Realization of a Low Noise Production System（實現低噪音化）

R-134a centrifugal water chiller has greatly decreased the production of noise during operation in comparison to the previous R-123 turbo chiller and other company centrifugal water chillers through application of precision impeller, optimum number of rotations, and low-noise design.

採用精密加工而成的葉輪、最適當的轉數，以及低噪音結構。比起以前的R-123冷媒的離心式冷水機更能發揮持續性的性能，並大幅度降低了運行噪音。

1st, 2nd Impeller

IGV(Inlet Guide Vane)

Retum Channel(Deswirler)

Features of the High-efficiency R-134a Centrifugal Water Chiller
高效率 R-134a 離心式冰水機的特點

Energy-saving High-performance Heat Transmittion Tube（節能高效率傳熱管）

The heat transfer rates of the evaporator and condenser have been significantly improved through the use of a high-performance heat transfer tube, THERMOEXCEL As a result, condensation temperature becomes higher, evaporation temperature becomes lower. This leads to decrease in pressure ratio of the compressor and thus one can save the cost of power consumption through major decrease of load on the compressor.

使用高性能熱傳管 "THERMOEXCEL"，進而大幅度提高蒸發器和冷凝器的熱交換率。降低壓縮機的壓縮比，大幅度減少壓縮機的負荷，進而減少消耗動力。

1. Heat Transmittion Tube for Evaporator "THERMOEXCEL-EKW"
   蒸發器用 "THERMOEXCEL-EKW" 熱傳管

In order to accelerate the boiling process and increase bubble point, a tunnel shall be operated in the lower region of the surface towards the direction of the circumference. This allows the refrigerant to evaporate quickly and thus provides complete and continuous boiling process.

Also, the condenser shall perform double grooving and ridge in order to enhance the heat transfer efficiency of the chilled water. As a result, the heat transfer performance has been improved over the previous single grooving and ridge heat transfer tubes.

為了促使沸騰，通過加工表面下方的圓柱形管道，使管道內部的冷媒迅速蒸發，進而達到完全並連續的沸騰。
並且為增強水側的傳熱性能，加工成雙重的槽溝和突起，比原有的曹溝突起加工熱傳管的傳熱性能優秀。

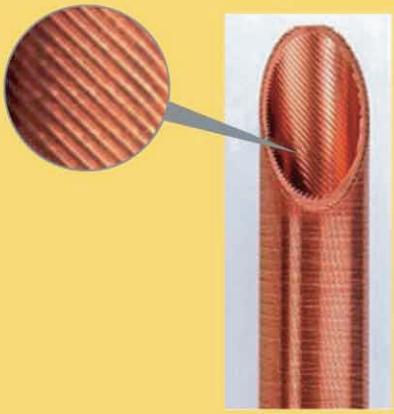

Internal Composition of an Old-model Heat Transfer Tube
以前傳熱管的內部結構

2. Heat Transmittion Tube for Condenser "THERMOEXCEL -CKW"
   冷凝器用 "THERMOEXCEL-CKW" 傳熱管

To allow the refrigerant to condense and drip easily, the condenser shall be operated in the shape of a Micro-Fin which has a sharp tip. Also, the condenser shall perform double grooving and ridge in order to enhance the heat transfer efficiency of the cooling water. As a result, the heat transfer rate has been improved over the previous groove and protrusion heat transfer tubes.

為使制冷媒冷凝後容易流下，將熱傳管加工製作成底部尖銳的形狀，並且為增強冷卻水側的傳性能，加工成雙重的槽溝和突起，比原有的槽溝突起加工熱傳管的傳熱性能優秀。

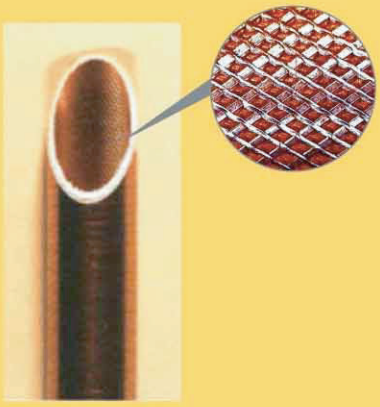

Internal Composition of THERMOEXCEL -EKW, CKW
THERMOEXCEL -EKW, CKW 的內部結構

Features of the High-efficiency R-134a Centrifugal Water Chiller
高效率 R-134a 離心式冰水機的特點

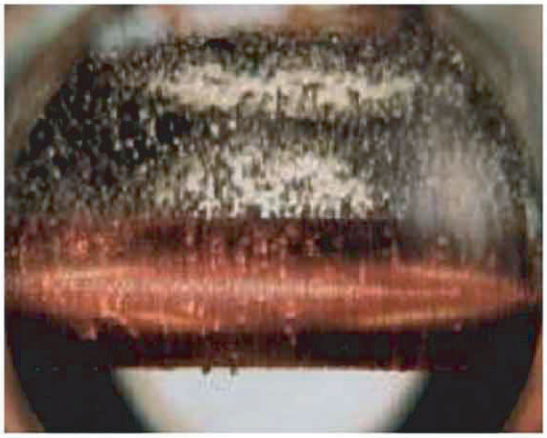

Boiling State (沸騰狀態)

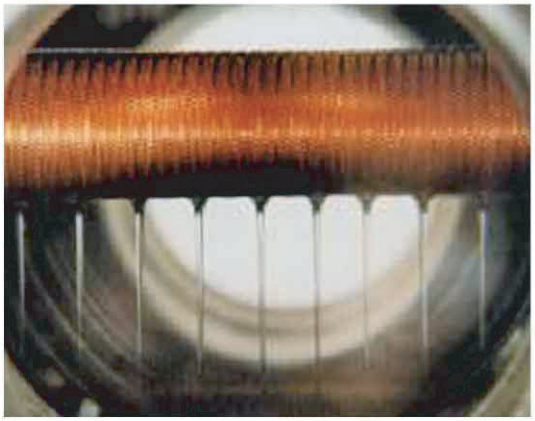

Condensed, Dripping (冷凝，流下狀態)

High-tech Control Center (高科技電控裝置)

7.5 color LCD touch screen graphically displays the chiller operation status, alarm history management, remote control, and scheduled operation, which allows convenient control and operation. In addition, the Pre-Alarm feature makes it possible to eliminate errors and take appropriate measures at the same time.

Not only that, language setting can be changed with a single touch on the touch screen. The control center provides Korean, English, and Chinese as the basic options while other languages are available per order.

採用7.5吋彩色觸摸屏，顯示冷水機運行狀態、故障紀錄管理、遠端控制、運行日程等狀態。方便操作及運行。並且具有One Touch的觸摸式顯示屏，可以變換不同的語言。韓語、英語、中文為基本語言，此外，也可通過訂購支援其他語言。

PLC Controller (PLC 控制器)

Color LCD Touch Screen Display Window (彩色觸控式顯示屏)

Features of the High-efficiency R-134a Centrifugal Water Chiller
高效率 R-134a 離心式冰水機的特點

Operation Status Display（顯示運行狀態）

Users may graphically check the chiller operation status such as the pressure, temperature, and control motor opening rate.

使用者可以由冰水機的顯示屏了解壓力、溫度以及各控制閥的開度等的運行狀態。

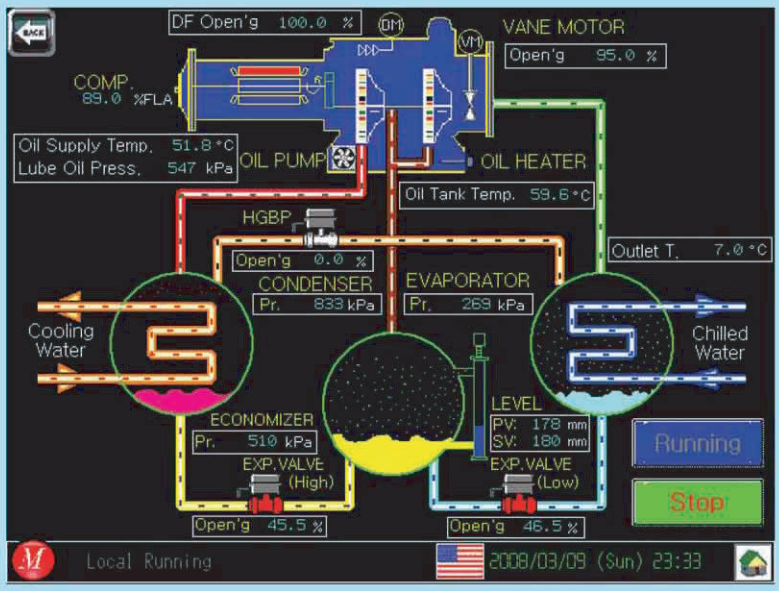

Convenient Capacity Control（容量調節）

Users may easily control the capacity control valve manually or automatically.

容量調節閥分為手動和自動兩種，可以簡單的進行調節。

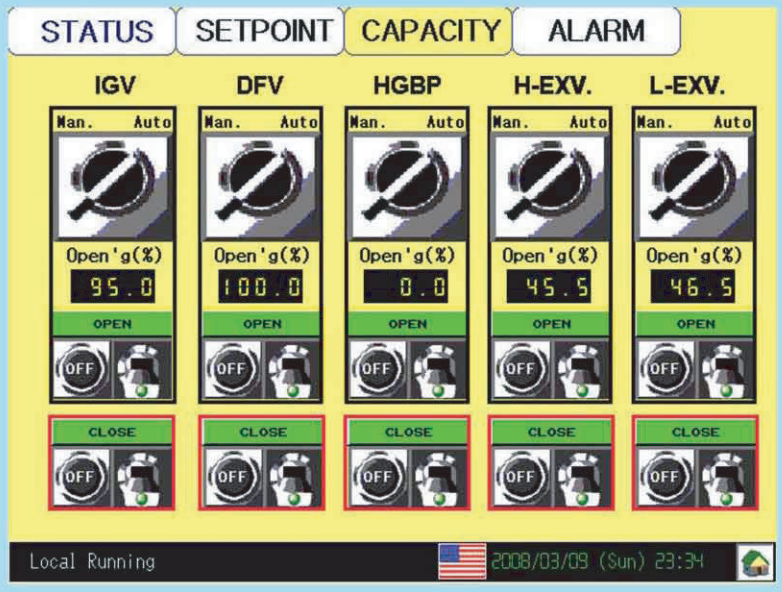

Alarm History (故障警報歷史紀錄)

Store up to 128 malfunctioning histories and may interpret the cause of alarm by storing up to 8 operation data for each alarm items when alarm is triggered.
最多可儲存128個故障紀錄，當故障警報發生時，故障警報發生的原因。
每個故障報警項目最多可存儲8個運行數據，進而可以把握。

Trend (趨勢圖)

Display maximum of up to 7 operation data in real-time as graphs and allows users to save them to CF card when necessary. And then print the saved data through the printer(Option).
最多可通過曲線表示在實時間內的7個運行數據，需要時可將數據儲存到 CF Card中。儲存的數據可通過打印。(選配)

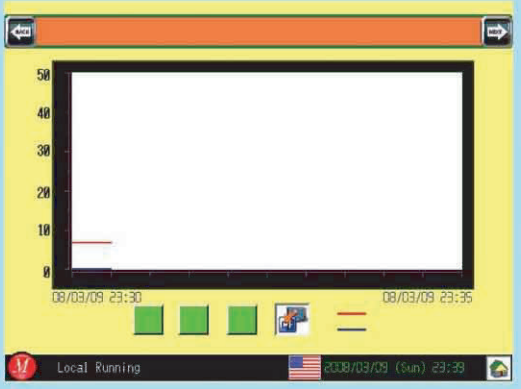

Pre-Alarm (警報)

Allow to eliminate errors and take appropriate measures by displaying pre-alarm signals befort the chiller stop to operate during normal operation due to alarm.
制冷機運行中通過警報，在運行停止時顯示警報信號，進而便於查找消除原因，並採取一定措施。

- High Oil Temperature Alarm (潤滑油高溫警報)
- Low Oil Temperature Alarm (潤滑油低溫警報)
- Freezing Prevention Alarm (防凍開關警報)
- High Condenser Pressure Alarm (冷凝器高壓警報)
- Low Evaporator Pressure Alarm (蒸發器低壓警報)
- High Oil Supply Temperature Alarm (潤滑油高溫警報)
- Low Oil Pressure Alarm (潤滑油低壓警報)

Supports Modbus Protocol (Option) 支持Modbus 通信協議 (選配)

Modbus protocol is provided in standard form to allow users to monitor and or control (modify configured values, remote operation) the chiller's operation and alarm status through RS-485 communication.
支持 Modbus通信協議，可以通過 RS-485接頭，進行控制及監查制冷機的運行狀態、蜂鳴報警狀態等(改變設定值、過程運行)。

PC Monitoring (Option) (PC 監測 (選配)

Operator may monitor and or control the chiller installed on the site by using a Ethernet-based PC from a remote location without having to travel to the site.
無需去現場，便可通過網路在過程電腦中檢控及操作現場。

Standard Specification

Standard Specification for High-efficiency Model
（高效率型規格表）

Item		Model	TR-E200H1		TR-E300H1		TR-E400H1		TR-E500H1		TR-E600H1	
Chilled-water Outlet Temperature 冰水出水溫度		℃	5	7	5	7	5	7	5	7	5	7
Cooling Capacity 冷卻能力		USRT	185	200	275	300	370	400	460	500	550	600
Chilled Water 冰 水	Flow Rate 流 量	m^3/h	112	121	166	181	224	242	278	302	333	363
	Pressure Drop 壓 降	mAq	8.6	10.1	8.6	10.2	8.6	10.1	8.8	10.4	8.7	10.4
	Connection Size 連接尺寸	A	125		150		200		200		250	
	No. of passes 連接迴路	-	3		3		3		3		3	
Cooling Water 冷卻水	Temperature 溫 度	℃	Inlet（入口）32 / Outlet（出口）37									
	Flow Rate 流 量	m^3/h	134	145	200	218	269	290	334	363	399	435
	Pressure Drop 壓 降	mAq	9.0	10.5	8.9	10.6	9.2	10.8	8.9	10.5	9.2	10.9
	Connection Size 連接尺寸	A	125		150		200		250		250	
	No. of passes 連接迴路	-	3		3		3		3		3	
Input 輸入功率		kW	126	128	187	192	233	232	290	290	347	348
Dimension 外型尺寸	Length(L) 長	mm	4,110		4,110		4,250		4,250		4,250	
	Width(W) 寬	mm	1,660		1,860		1,980		2,150		2,250	
	Height(H) 高	mm	2,039		2,169		2,265		2,343		2,390	
Weight 重 量	Shipping Weight 機體重量	Ton	6.5		7.6		8.8		10.2		11.1	
	Operation Weight 運轉重量	Ton	6.9		8.1		9.6		11.1		12.2	

Note) 1. Chilled water is based on 5°C of inlet and outlet temperature difference
2. Fouling Factor for cold water and coolant is 0.0001 $m^2h°C$ / kcal.
3. Maximum operational pressure is 10kg / cm G for cold water and coolant. Higher pressure can also be used. Please contact our company when the operational pressure exceeds 10kg/cm^2 G.
4. The standard voltages for the main power are as follows. 3/60(50)Hz/380V, 440V, 3300V, 6600V
5. The standard starting method is STAR-DEL TA method while the following methods can also be used. STAR-DELTA for 380V, 440V, and 3300V：REACTOR for 3300V：and AUTO-COMENSATED for 6600V.
6. Auxiliary power is 360(50)Hz/220V, 380V, 440V.
7. Product standards and specifications are subject to change without notice due to product reform.

註) 1. 冷水入出口的溫度差是5度。
2. 冷水、冷卻水的污染系數為 0.0001m^2 h°C/kcal。
3. 冷水、冷卻水的最大使用壓力為10kg/cm^2 G，若最大使用壓力超過10kg/cm^2 G時，請與義公司聯繫，主電源規格如下
4. 3Ø/60(50)Hz / 380V, 440V, 3300V, 6600V
標準啟動方式為 Y-△啟動，但也可採用以下啟動方式。
5. 380V, 440V, 3300V時為Y-△啟動，300V時為 電抗器啟動，6600為自耦度壓器 啟動
6. 輔助電源為 3Ø/60(50) Hz / 220V, 380V, 40V。
7. 規格可能隨產品的改良而有所變化。

Standard Feature（標準外型）

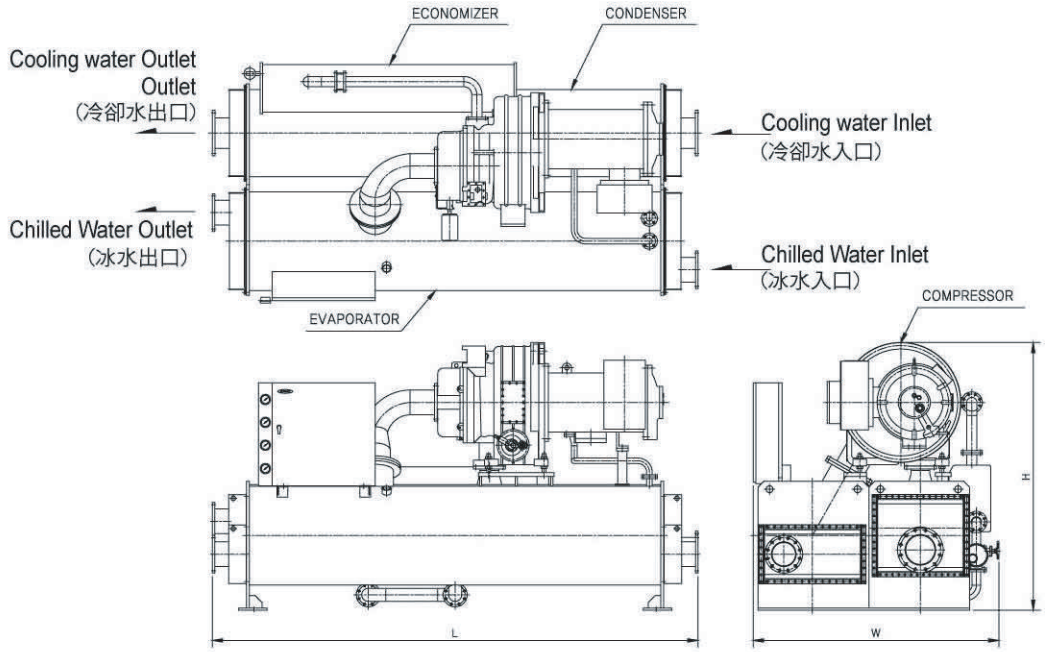

Standard Specification for High-efficiency Model
（高效率型規格表）

Item		Model	TR-G700H1		TR-G800H1		TR-G900H1		TR-G1000H1		TR-G1200H1	
Chilled-water Outlet Temperature 冰水出水溫度		℃	5	7	5	7	5	7	5	7	5	7
Cooling Capacity 冷卻能力		USRT	640	700	735	800	820	900	920	1,000	1,100	1,200
Chilled Water 冰 水	Flow Rate 流 量	m^3/h	387	423	445	484	496	544	556	605	665	726
	Pressure Drop 壓 降	mAq	5.5	6.6	5.6	6.6	5.4	6.5	5.5	6.5	5.5	6.6
	Connection Size 連接尺寸	A	250		300		300		300		300	
	No. of passes 連接迴路	-	2		2		2		2		2	
Cooling Water 冷卻水	Temperature 溫 度	℃	Inlet（入口）32 / Outlet（出口）37									
	Flow Rate 流 量	m^3/h	464	508	533	581	595	653	668	726	798	871
	Pressure Drop 壓 降	mAq	6.4	7.6	6.5	7.7	6.3	7.6	6.5	7.7	6.6	7.9
	Connection Size 連接尺寸	A	300		300		300		300		300	
	No. of passes 連接迴路	-	2		2		2		2		2	
Input 輸入功率		kW	403	406	463	464	508	513	570	570	682	684
Dimension 外型尺寸	Length(L) 長	mm	4,960		4,960		4,960		4,960		4,960	
	Width(W) 寬	mm	2,360		2,470		2,600		2,665		2,830	
	Height(H) 高	mm	2,690		2,695		2,840		2,880		2,980	
Weight 重 量	Shipping Weight 機體重量	Ton	14.0		14.8		16.2		17.1		19.0	
	Operation Weight 運轉重量	Ton	15.1		16.0		17.5		18.6		20.8	

Note) 1. Chilled water is based on 5℃ of inlet and outlet temperature difference
2. Fouling Factor for cold water and coolant is 0.0001 $m^2h℃$ / kcal.
3. Maximum operational pressure is 10kg / cm G for cold water and coolant. Higher pressure can also be used. Please contact our company when the operational pressure exceeds 10kg/cm^2 G.
4. The standard voltages for the main power are as follows. 3/60(50)Hz/380V, 440V, 3300V, 6600V
5. The standard starting method is STAR-DEL TA method while the following methods can also be used. STAR-DELTA for 380V, 440V, and 3300V：REACTOR for 3300V：and AUTO-COMENSATED for 6600V.
6. Auxiliary power is 360(50)Hz/220V, 380V, 440V.
7. Product standards and specifications are subject to change without notice due to product reform.

註) 1. 冷水入出口的溫度差是5度。
2. 冷水、冷卻水的污染系數為 0.0001m^2 h℃/kcal。
3. 冷水、冷卻水的最大使用壓力為10kg/cm^2 G，若最大使用壓力超過10kg/cm^2 G時，請與義公司聯繫，主電源規格如下
4. 3Ø/60(50)Hz / 380V, 440V, 3300V, 6600V
標準啟動方式為 Y-△啟動，但也可採用以下啟動方式。
5. 380V, 440V, 3300V時為Y-△啟動，300V時為 電抗器啟動，6600為自耦度壓器 啟動
6. 輔助電源為 3Ø/60(50) Hz / 220V, 380V, 40V。
7. 規格可能隨產品的改良而有所變化。

Standard Feature（標準外型）

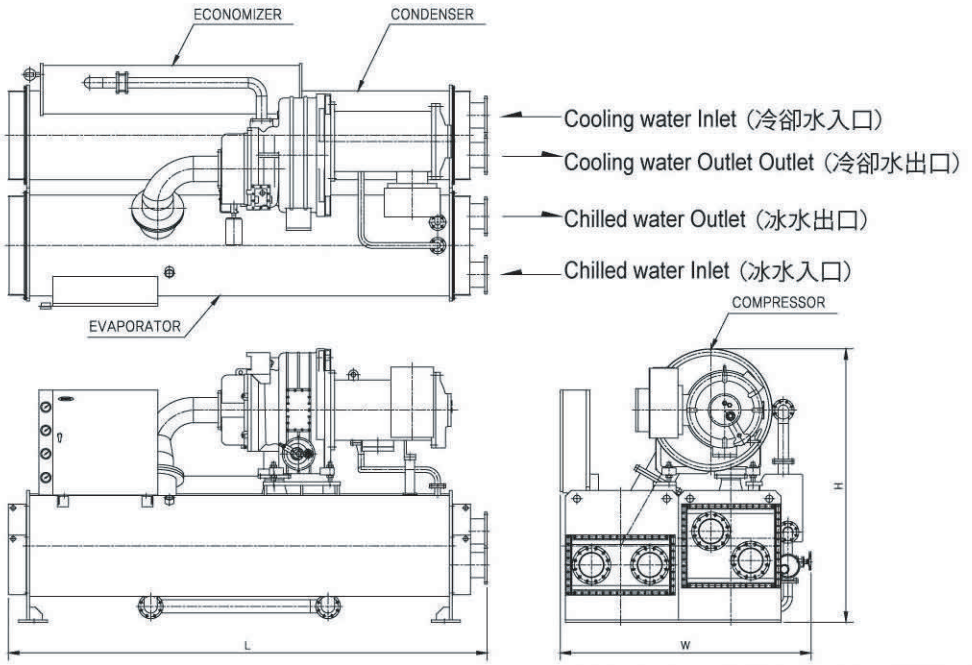

Electrical Characteristics and Electric Wire Capacity for High-efficiency Model
（高效率型電氣特性及配線線徑表）

50Hz

UNIT	DIVISION	UNITS	380V(440V) CLASS			3,300V CLASS			6,600V CLASS		
			SUBSTATION	STARTER	CONDUIT	SUBSTATION	STARTER	CONDUIT	SUBSTATION	STARTER	CONDUIT
TR-E200H1	WIRING 配管尺寸	mm²	150x3C	3CxCV70x2	(70)x2	16x3C	3CxCV16x2	(54)x2	16x3C	3CxCV16	(70)x1
	OUTPUT 輸出	kW	130			130			130		
	F.L.C 運轉電流	A	242 (209)			27			13		
	POWER FACTOR 功率因素	%	88.7			89.7			90.7		
	EFFICIENCY 效率	%	92.1			92.5			93		
	INPUT 輸出功率	kW	141.2			140.5			139.8		
	START METHOD 啟動方式	--	STAR-DELTA STARTING			STAR-DELTA STARTING			AUTO COMPENSATED STARTING		
TR-E300H1	WIRING 配管尺寸	mm²	240x3C	3CxCV120x2	(82)x2	16x3C	3CxCV16x2	(54)x2	16x3C	3CxCV16	(70)x1
	OUTPUT 輸出	kW	200			200			200		
	F.L.C 運轉電流	A	368 (317.8A)			42			21		
	POWER FACTOR 功率因素	%	89.2			90			91		
	EFFICIENCY 效率	%	92.5			93			93.5		
	INPUT 輸出功率	kW	216.2			215.1			213.9		
	START METHOD 啟動方式	--	STAR-DELTA STARTING			STAR-DELTA STARTING			AUTO COMPENSATED STARTING		
TR-E400H1	WIRING 配管尺寸	mm²	150x3Cx2	3CxCV150x2	(82)x2	25x3C	3CxCV16x2	(54)x2	16x3C	3CxCV16	(70)x1
	OUTPUT 輸出	kW	240			240			240		
	F.L.C 運轉電流	A	440 (380)			50			25		
	POWER FACTOR 功率因素	%	89.6			90.3			91.3		
	EFFICIENCY 效率	%	92.5			93			93.5		
	INPUT 輸出功率	kW	259.5			258.1			256.7		
	START METHOD 啟動方式	--	STAR-DELTA STARTING			STAR-DELTA STARTING			AUTO COMPENSATED STARTING		
TR-E500H1	WIRING 配管尺寸	mm²	185x3Cx2	3CxCV185x2	(92)x2	25x3C	3CxCV16x2	(54)x2	16x3C	3CxCV16	(70)x1
	OUTPUT 輸出	kW	300			300			300		
	F.L.C 運轉電流	A	545 (470.7)			62			30		
	POWER FACTOR 功率因素	%	90			90.6			91.6		
	EFFICIENCY 效率	%	93			93.5			94		
	INPUT 輸出功率	kW	322.6			320.9			319.1		
	START METHOD 啟動方式	--	STAR-DELTA STARTING			STAR-DELTA STARTING			AUTO COMPENSATED STARTING		
TR-E600H1	WIRING 配管尺寸	mm²	120x3Cx4	3CxCV120x4	(82)x4	50x3C	3CxCV25x2	(54)x2	16x3C	3CxCV16	(70)x1
	OUTPUT 輸出	kW	370			370			370		
	F.L.C 運轉電流	A	668 (576.9)			75			38		
	POWER FACTOR 功率因素	%	90.5			91			91.8		
	EFFICIENCY 效率	%	93			93.5			94		
	INPUT 輸出功率	kW	397.8			395.7			393.6		
	START METHOD 啟動方式	--	STAR-DELTA STARTING			STAR-DELTA STARTING			AUTO COMPENSATED STARTING		
TR-E700H1	WIRING 配管尺寸	mm²	120x3Cx4	3CxCV120x4	(82)x4	50x3C	3CxCV25x2	(54)x2	16x3C	3CxCV16	(70)x1
	OUTPUT 輸出	kW	430			430			430		
	F.L.C 運轉電流	A	769 (664.1A)			88			43		
	POWER FACTOR 功率因素	%	90.9			91.3			92.3		
	EFFICIENCY 效率	%	93.5			94			94		
	INPUT 輸出功率	kW	459.9			457.4			457.4		
	START METHOD 啟動方式	--	STAR-DELTA STARTING			STAR-DELTA STARTING			AUTO COMPENSATED STARTING		
TR-E800H1	WIRING 配管尺寸	mm²				50x3C	3CxCV25x2	(54)x2	25x3C	3CxCV25	(70)x1
	OUTPUT 輸出	kW				490			490		
	F.L.C 運轉電流	A				99			49		
	POWER FACTOR 功率因素	%				91.7			92.5		
	EFFICIENCY 效率	%				94			94		
	INPUT 輸出功率	kW				521.3			521.3		
	START METHOD 啟動方式	--				STAR-DELTA STARTING			AUTO COMPENSATED STARTING		

Electrical Characteristics and Electric Wire Capacity for High-efficiency Model
(高效率型電氣特性及配線線徑表)

50Hz

UNIT	DIVISION	UNITS	3,300V CLASS			6,600V CLASS		
			SUBSTATION	STARTER	CONDUIT	SUBSTATION	STARTER	CONDUIT
TR-E900H1	WIRING 配管尺寸	mm^2	95x3C	3CxCV95x1	(82)x1	35x3C	3CxCV35x1	(70)x1
	OUTPUT 輸出	kW	540			540		
	F.L.C 運轉電流	A	109			54		
	POWER FACTOR 功率因素	%	91.8			92.7		
	EFFICIENCY 效率	%	94			94		
	INPUT 輸出功率	kW	574.5			574.5		
	START METHOD 啟動方式	--	REACTOR			AUTO COMPENSATED STARTING		
TR-E1000H1	WIRING 配管尺寸	mm^2	95x3C	3CxCV95x1	(82)x1	35x3C	3CxCV35x1	(70)x1
	OUTPUT 輸出	kW	610			610		
	F.L.C 運轉電流	A	123			61		
	POWER FACTOR 功率因素	%	92.3			93.1		
	EFFICIENCY 效率	%	94			94.5		
	INPUT 輸出功率	kW	648.9			645.5		
	START METHOD 啟動方式	--	REACTOR			AUTO COMPENSATED STARTING		
TR-E1200H1	WIRING 配管尺寸	mm^2	150x3C	3CxCV150x1	(92)x1	35x3C	3CxCV35x1	(70)x1
	OUTPUT 輸出	kW	720			720		
	F.L.C 運轉電流	A	145			71		
	POWER FACTOR 功率因素	%	92.7			93.5		
	EFFICIENCY 效率	%	94			94.5		
	INPUT 輸出功率	kW	766			761.9		
	START METHOD 啟動方式	--	REACTOR			AUTO COMPENSATED STARTING		

Associated Control Operation Diagram (配線示意圖)

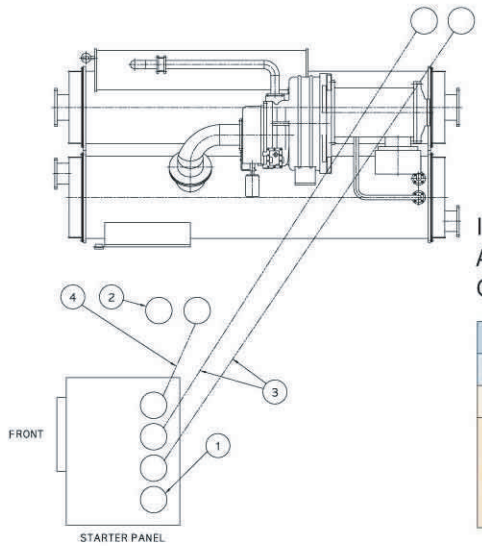

INSTALL FIELD WIRING IN ACCORDANCE WITH THE WIRING DIAGRAMS AND APPLICABLE ELECTRICAL CORDS. TABLE SHOWS THE ARRANGEMENT OF ELECTRICAL PIPING AND WIRING.

①	ELECTRICAL SOURCE FOR MAIN POWER	3Ø 3W 380V, 440V, 3.3kV, 6.6kV
②	ELECTRICAL SOURCE FOR AUXILIARY	3Ø 3W 220V, 380V, 440V
③	POWER WIRING FOR STARTER - MOTOR	REFER TO TABLE BELOW
④	CONTROL WIRING OF STARTER - CONTROL PANEL	1) CW-SB 1.5mm^2 x 8C 2) CW 1.5mm^2 x 6C (3C:SPARE) 3) CONDUIT PIPE : 28 x 2

Electrical Characteristics and Electric Wire Capacity for High-efficiency Model
（高效率型電氣特性及配線線徑表）

60Hz

UNIT	DIVISION	UNITS	380V(440V) CLASS			3,300V CLASS			6,600V CLASS		
			SUBGTATION	STARTER	CONDUIT	SUBGTATION	STARTER	CONDUIT	SUBGTATION	STARTER	CONDUIT
TR-E200H1	WIRING 配管尺寸	mm²	150x3C	3CxCV70x2	(70)x2	16x3C	3CxCV16x2	(54)x2	16x3C	3CxCV16	(70)x1
	OUTPUT 輸出	kW	130			130			130		
	F.L.C 運轉電流	A	234 (202.1)			27			13		
	POWER FACTOR 功率因素	%	91.4			91.4			91.3		
	EFFICIENCY 效率	%	92.5			92.4			92.4		
	INPUT 輸出功率	kW	140.5			140.7			140.7		
	START METHOD 啟動方式	--	STAR-DELTA STARTING			STAR-DELTA STARTING			AUTO COMPENSATED STARTING		
TR-E300H1	WIRING 配管尺寸	mm²	240x3C	3CxCV95x2	(70)x2	16x3C	3CxCV16x2	(54)x2	16x3C	3CxCV16	(70)x1
	OUTPUT 輸出	kW	200			200			200		
	F.L.C 運轉電流	A	355 (306.6)			41			20		
	POWER FACTOR 功率因素	%	91.9			91.9			91.8		
	EFFICIENCY 效率	%	93.2			93.2			93.3		
	INPUT 輸出功率	kW	214.6			214.6			214.4		
	START METHOD 啟動方式	--	STAR-DELTA STARTING			STAR-DELTA STARTING			AUTO COMPENSATED STARTING		
TR-E400H1	WIRING 配管尺寸	mm²	150x3Cx2	3CxCV150x2	(82)x2	25x3C	3CxCV16x2	(54)x2	16x3C	3CxCV16	(70)x1
	OUTPUT 輸出	kW	240			240			240		
	F.L.C 運轉電流	A	426 (367.9)			49			24		
	POWER FACTOR 功率因素	%	91.8			91.8			91.8		
	EFFICIENCY 效率	%	93.2			93.2			93.4		
	INPUT 輸出功率	kW	257.5			257.5			257		
	START METHOD 啟動方式	--	STAR-DELTA STARTING			STAR-DELTA STARTING			AUTO COMPENSATED STARTING		
TR-E500H1	WIRING 配管尺寸	mm²	185x3Cx2	3CxCV185x2	(92)x2	25x3C	3CxCV16x2	(54)x2	16x3C	3CxCV16	(70)x1
	OUTPUT 輸出	kW	300			300			300		
	F.L.C 運轉電流	A	525 (453.4)			61			30		
	POWER FACTOR 功率因素	%	92.1			92.1			92.1		
	EFFICIENCY 效率	%	94.3			93.8			93.5		
	INPUT 輸出功率	kW	318.1			319.8			320.9		
	START METHOD 啟動方式	--	STAR-DELTA STARTING			STAR-DELTA STARTING			AUTO COMPENSATED STARTING		
TR-E600H1	WIRING 配管尺寸	mm²	120x3Cx4	3CxCV120x4	(82)x4	50x3C	3CxCV25x2	(54)x2	16x3C	3CxCV16	(70)x1
	OUTPUT 輸出	kW	370			370			370		
	F.L.C 運轉電流	A	648 (559.6)			75			37		
	POWER FACTOR 功率因素	%	92.2			92.2			92.2		
	EFFICIENCY 效率	%	94.1			93.8			93.8		
	INPUT 輸出功率	kW	393.2			394.5			394.5		
	START METHOD 啟動方式	--	STAR-DELTA STARTING			STAR-DELTA STARTING			AUTO COMPENSATED STARTING		
TR-E700H1	WIRING 配管尺寸	mm²	120x3Cx4	3CxCV120x4	(82)x4	50x3C	3CxCV25x2	(54)x2	16x3C	3CxCV16	(70)x1
	OUTPUT 輸出	kW	430			430			430		
	F.L.C 運轉電流	A	749 (646.9)			87			43		
	POWER FACTOR 功率因素	%	92.3			92.3			92.3		
	EFFICIENCY 效率	%	94.5			94.1			93.8		
	INPUT 輸出功率	kW	455			457			458.4		
	START METHOD 啟動方式	--	STAR-DELTA STARTING			STAR-DELTA STARTING			AUTO COMPENSATED STARTING		
TR-E800H1	WIRING 配管尺寸	mm²				50x3C	3CxCV25x2	(54)x2	25x3C	3CxCV25	(70)x1
	OUTPUT 輸出	kW				490			490		
	F.L.C 運轉電流	A				99			50		
	POWER FACTOR 功率因素	%				92.3			92.3		
	EFFICIENCY 效率	%				94.1			93.8		
	INPUT 輸出功率	kW				520.7			522.4		
	START METHOD 啟動方式	--				STAR-DELTA STARTING			AUTO COMPENSATED STARTING		

Electrical Characteristics and Electric Wire Capacity for High-efficiency Model
（高效率型電氣特性及配線線徑表）

60Hz

UNIT	DIVISION	UNITS	3,300V CLASS			6,600V CLASS		
			SUBSTATION	STARTER	CONDUIT	SUBSTATION	STARTER	CONDUIT
TR-E900H1	WIRING 配管尺寸	mm^2	70x3C	3CxCV70x1	(70)x1	35x3C	3CxCV35x1	(70)x1
	OUTPUT 輸出	kW	540			540		
	F.L.C 運轉電流	A	108			49		
	POWER FACTOR 功率因素	%	92.4			92.4		
	EFFICIENCY 效率	%	94.3			93.9		
	INPUT 輸出功率	kW	572.6			575.1		
	START METHOD 啟動方式	--	REACTOR			AUTO COMPENSATED STARTING		
TR-E1000H1	WIRING 配管尺寸	mm^2	95x3C	3CxCV95x1	(70)x1	35x3C	3CxCV35x1	(70)x1
	OUTPUT 輸出	kW	610			610		
	F.L.C 運轉電流	A	122			61		
	POWER FACTOR 功率因素	%	92.5			92.5		
	EFFICIENCY 效率	%	94.5			94.5		
	INPUT 輸出功率	kW	645.5			645.5		
	START METHOD 啟動方式	--	REACTOR			AUTO COMPENSATED STARTING		
TR-E1200H1	WIRING 配管尺寸	mm^2	120x3C	3CxCV120x1	(82)x1	35x3C	3CxCV35x1	(70)x1
	OUTPUT 輸出	kW	720			720		
	F.L.C 運轉電流	A	144			72		
	POWER FACTOR 功率因素	%	92.5			92.5		
	EFFICIENCY 效率	%	94.5			94.5		
	INPUT 輸出功率	kW	761.9			761.9		
	START METHOD 啟動方式	--	REACTOR			AUTO COMPENSATED STARTING		

Associated Control Operation Diagram（配線示意圖）

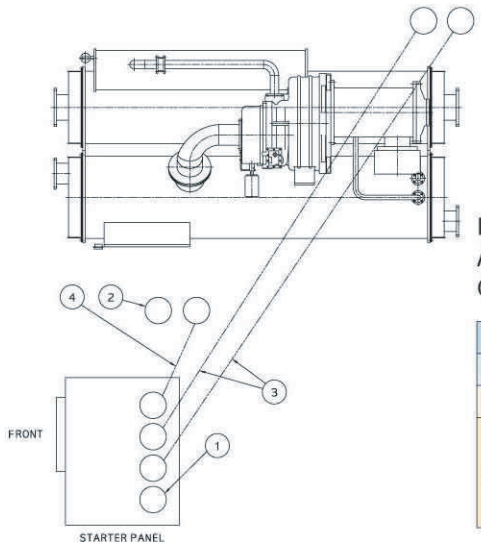

INSTALL FIELD WIRING IN ACCORDANCE WITH THE WIRING DIAGRAMS AND APPLICABLE ELECTRICAL CORDS. TABLE SHOWS THE ARRANGEMENT OF ELECTRICAL PIPING AND WIRING.

①	ELECTRICAL SOURCE FOR MAIN POWER	3Ø 3W 380V, 440V, 3.3kV, 6.6kV
②	ELECTRICAL SOURCE FOR AUXILIARY	3Ø 3W 220V, 380V, 440V
③	POWER WIRING FOR STARTER - MOTOR	REFER TO TABLE BELOW
④	CONTROL WIRING OF STARTER - CONTROL PANEL	1) CW-SB 1.5mm^2 x 8C 2) CW 1.5mm^2 x 6C (3C:SPARE) 3) CONDUIT PIPE : 28 x 2

Standard Specification

Standard Specification for Standard-efficiency Model
(標準效率型高效率型規格表)

Item		Model	TR-E200H1		TR-E300H1		TR-E400H1		TR-E500H1		TR-E600H1	
Chilled-water Outlet Temperature 冰水出水溫度		℃	5	7	5	7	5	7	5	7	5	7
Cooling Capacity 冷卻能力		USRT	185	200	275	300	370	400	460	500	550	600
Chilled Water 冰 水	Flow Rate 流 量	m³/h	112	121	166	181	224	242	278	302	333	363
	Pressure Drop 壓 降	mAq	8.6	10.1	8.6	10.2	8.6	10.1	8.8	10.4	8.7	10.4
	Connection Size 連接尺寸	A	125		150		200		200		250	
	No. of passes 連接迴路	-	3		3		3		3		3	
Cooling Water 冷卻水	Temperature 溫 度	℃	Inlet (入口) 32 / Outlet (出口) 37									
	Flow Rate 流 量	m³/h	137	148	203	218	273	290	339	369	406	443
	Pressure Drop 壓 降	mAq	9.3	10.9	9.2	10.9	9.6	10.8	9.1	10.8	9.5	11.3
	Connection Size 連接尺寸	A	125		150		200		250		250	
	No. of passes 連接迴路	-	3		3		3		3		3	
Input 輸入功率		kW	135	136	201	204	252	252	313	315	374	378
Dimension 外型尺寸	Length(L) 長	mm	4,110		4,110		4,250		4,250		4,250	
	Width(W) 寬	mm	1,430		1,609		1,728		1,893		2,000	
	Height(H) 高	mm	2,039		2,169		2,265		2,343		2,390	
Weight 重 量	Shipping Weight 機體重量	Ton	6.0		7.1		8.4		9.7		10.6	
	Operation Weight 運轉重量	Ton	6.5		7.7		9.1		10.6		11.6	

Note) 1. Chilled water is based on 5°C of inlet and outlet temperature difference
2. Fouling Factor for cold water and coolant is 0.0001 m²h°C / kcal.
3. Maximum operational pressure is 10kg / cm G for cold water and coolant. Higher pressure can also be used. Please contact our company when the operational pressure exceeds 10kg/cm²G.
4. The standard voltages for the main power are as follows. 3/60(50)Hz/380V, 440V, 3300V, 6600V
5. The standard starting method is STAR-DEL TA method while the following methods can also be used. STAR-DELTA for 380V, 440V, and 3300V : REACTOR for 3300V : and AUTO-COMENSATED for 6600V.
6. Auxiliary power is 360(50)Hz/220V, 380V, 440V.
7. Product standards and specifications are subject to change without notice due to product reform.

註) 1. 冷水入出口的溫度差是5度。
2. 冷水、冷卻水的污染系數為 0.0001m² h°C/kcal。
3. 冷水、冷卻水的最大使用壓力為10kg/cm² G，若最大使用壓力超過10kg/cm² G時，請與義公司聯繫，主電源規格如下
4. 3Ø/60(50)Hz / 380V, 440V, 3300V, 6600V
標準啟動方式為 Y-△啟動，但也可採用以下啟動方式。
5. 380V, 440V, 3300V時為Y-△啟動，300V時為 電抗器啟動，6600為自耦度壓器 啟動
6. 輔助電源為 3Ø/60(50) Hz / 220V, 380V, 40V。
7. 規格可能隨產品的改良而有所變化。

Standard Feature (標準外型)

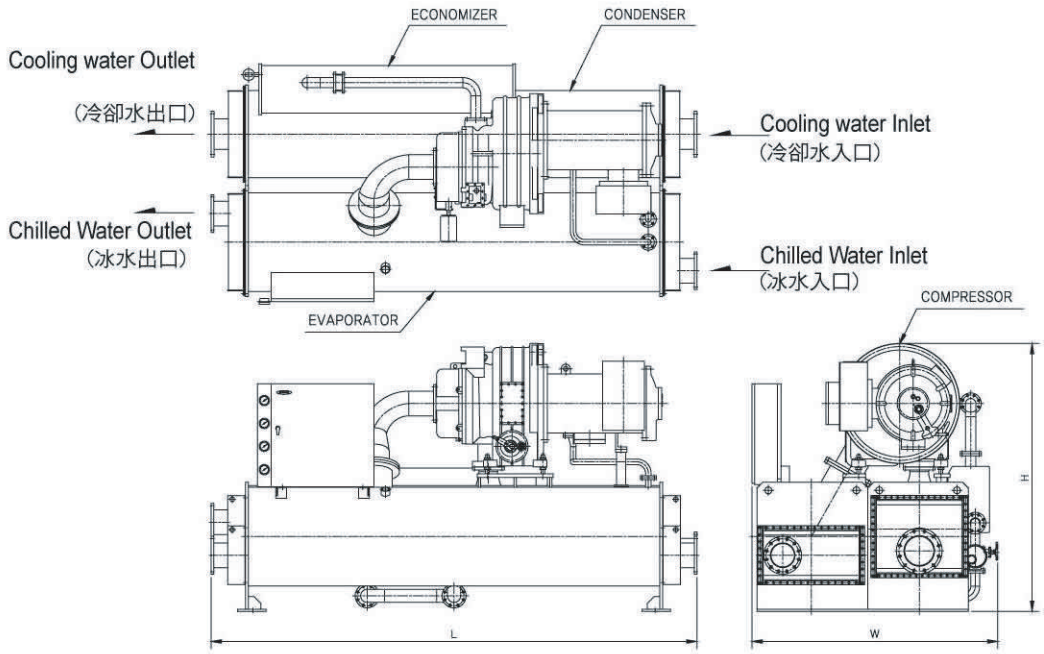

Standard Specification for Standard-efficiency Model
（標準效率型高效率型規格表）

Item		Model	TR-G700H1		TR-G800H1		TR-G900H1		TR-G1000H1		TR-G1200H1	
Chilled-water Outlet Temperature 冰水出水溫度		℃	5	7	5	7	5	7	5	7	5	7
Cooling Capacity 冷卻能力		USRT	640	700	735	800	820	900	920	1,000	1,100	1,200
Chilled Water 冰 水	Flow Rate 流 量	m³/h	387	423	445	484	496	544	556	605	665	726
	Pressure Drop 壓 降	mAq	5.5	6.6	5.6	6.6	5.4	6.5	5.5	6.5	5.5	6.6
	Connection Size 連接尺寸	A	250		300		300		300		300	
	No. of passes 連接迴路	-	2		2		2		2		2	
Cooling Water 冷卻水	Temperature 溫 度	℃	Inlet（入口）32 / Outlet（出口）37									
	Flow Rate 流 量	m³/h	472	516	542	590	605	664	679	738	812	885
	Pressure Drop 壓 降	mAq	6.5	7.8	6.7	7.9	6.6	7.9	6.8	8.0	6.9	8.2
	Connection Size 連接尺寸	A	300		300		300		300		350	
	No. of passes 連接迴路	-	2		2		2		2		2	
Input 輸入功率		kW	435	441	500	504	558	567	626	630	748	756
Dimension 外型尺寸	Length(L) 長	mm	4,960		4,960		4,960		4,960		4,960	
	Width(W) 寬	mm	2,070		2,182		2,304		2,374		2,528	
	Height(H) 高	mm	2,690		2,695		2,840		2,880		2,980	
Weight 重 量	Shipping Weight 機體重量	Ton	13.3		14.1		15.4		16.2		18.0	
	Operation Weight 運轉重量	Ton	14.4		15.3		16.7		17.7		19.7	

Note) 1. Chilled water is based on 5°C of inlet and outlet temperature difference
2. Fouling Factor for cold water and coolant is 0.0001 m²h°C / kcal.
3. Maximum operational pressure is 10kg / cm G for cold water and coolant. Higher pressure can also be used. Please contact our company when the operational pressure exceeds 10kg/cm²G.
4. The standard voltages for the main power are as follows. 3/60(50)Hz/380V, 440V, 3300V, 6600V
5. The standard starting method is STAR-DEL TA method while the following methods can also be used. STAR-DELTA for 380V, 440V, and 3300V；REACTOR for 3300V；and AUTO-COMENSATED for 6600V.
6. Auxiliary power is 360(50)Hz/220V, 380V, 440V.
7. Product standards and specifications are subject to change without notice due to product reform.

註) 1. 冷水入出口的溫度差是5度。
2. 冷水、冷卻水的污染系數為 0.0001m² h°C/kcal。
3. 冷水、冷卻水的最大使用壓力為10kg/cm² G，若最大使用壓力超過10kg/cm² G時，請與義公司聯繫，主電源規格如下
4. 3Ø/60(50)Hz / 380V, 440V, 3300V, 6600V
標準啟動方式為 Y-△啟動，但也可採用以下啟動方式。
5. 380V, 440V, 3300V時為Y-△啟動，300V時為 電抗器啟動，6600為自耦度壓器 啟動
6. 輔助電源為 3Ø/60(50) Hz / 220V, 380V, 40V。
7. 規格可能隨產品的改良而有所變化。

Standard Feature（標準外型）

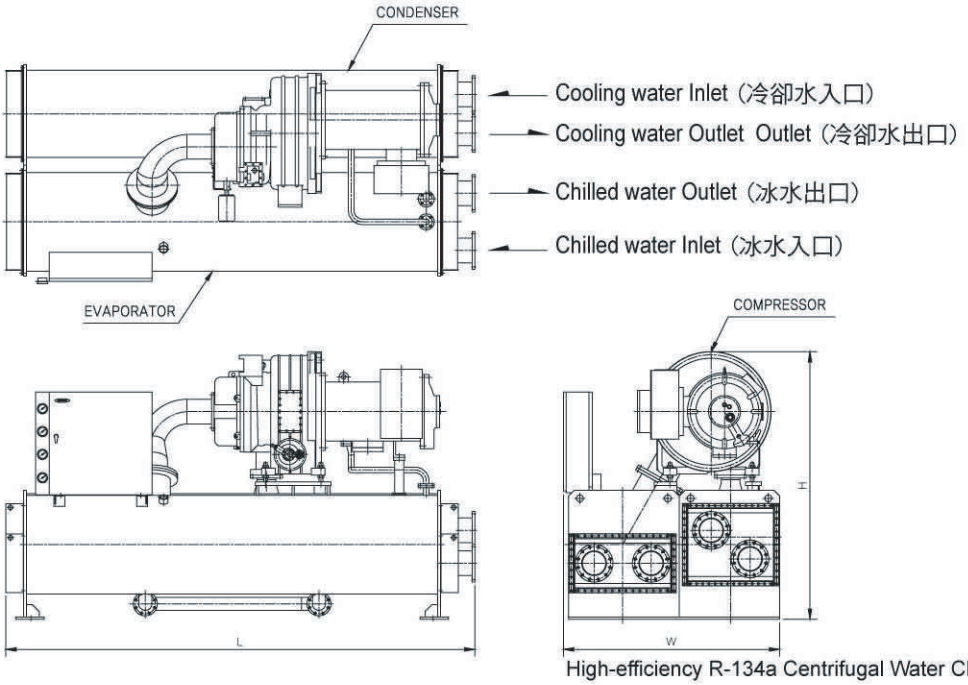

Electrical Characteristics and Electric Wire Capacity

Electrical Characteristics and Electric Wire Capacity for Standard-efficiency Model
（標準效率型電器特點及電器配線容量）

50Hz

UNIT	DIVISION	UNITS	380V(440V) CLASS			3,300V CLASS			6,600V CLASS		
			SUBGTATION	STARTER	CONDUIT	SUBGTATION	STARTER	CONDUIT	SUBGTATION	STARTER	CONDUIT
TR-G200H1	WIRING 配管尺寸	mm²	150x3C	3CxCV70x2	(70)x2	16x3C	3CxCV16x2	(54)x2	16x3C	3CxCV16	(70)x1
	OUTPUT 輸出	kW	140			140			140		
	F.L.C 運轉電流	A	260 (224.5)			29			15		
	POWER FACTOR 功率因素	%	88.8			89.7			90.7		
	EFFICIENCY 效率	%	92.1			92.6			93		
	INPUT 輸出功率	kW	152			151.2			150.5		
	START METHOD 啟動方式	--	STAR-DELTA STARTING			STAR-DELTA STARTING			AUTO COMPENSATED STARTING		
TR-G300H1	WIRING 配管尺寸	mm²	240x3C	3CxCV120x2	(82)x2	16x3C	3CxCV16x2	(54)x2	16x3C	3CxCV16	(70)x1
	OUTPUT 輸出	kW	210			210			210		
	F.L.C 運轉電流	A	383 (330.8A)			44			22		
	POWER FACTOR 功率因素	%	90			90			91		
	EFFICIENCY 效率	%	92.5			93			93.5		
	INPUT 輸出功率	kW	227			225.8			224.6		
	START METHOD 啟動方式	--	STAR-DELTA STARTING			STAR-DELTA STARTING			AUTO COMPENSATED STARTING		
TR-G400H1	WIRING 配管尺寸	mm²	150x3Cx2	3CxCV150x2	(82)x2	25x3C	3CxCV16x2	(54)x2	16x3C	3CxCV16	(70)x1
	OUTPUT 輸出	kW	260			260			260		
	F.L.C 運轉電流	A	475 (410.2)			54			27		
	POWER FACTOR 功率因素	%	90			90.3			91.3		
	EFFICIENCY 效率	%	92.5			93.1			93.5		
	INPUT 輸出功率	kW	281.1			279.3			278.1		
	START METHOD 啟動方式	--	STAR-DELTA STARTING			STAR-DELTA STARTING			AUTO COMPENSATED STARTING		
TR-G500H1	WIRING 配管尺寸	mm²	240x3Cx2	3CxCV240x2	(104)x2	25x3C	3CxCV16x2	(54)x2	16x3C	3CxCV16	(70)x1
	OUTPUT 輸出	kW	330			330			330		
	F.L.C 運轉電流	A	596 (514.7)			68			33		
	POWER FACTOR 功率因素	%	90.3			90.6			91.7		
	EFFICIENCY 效率	%	93.2			93.5			94		
	INPUT 輸出功率	kW	354.1			352.9			351.1		
	START METHOD 啟動方式	--	STAR-DELTA STARTING			STAR-DELTA STARTING			AUTO COMPENSATED STARTING		
TR-G600H1	WIRING 配管尺寸	mm²	120x3Cx4	3CxCV120x4	(82)x4	50x3C	3CxCV25x2	(54)x2	16x3C	3CxCV16	(70)x1
	OUTPUT 輸出	kW	390			390			390		
	F.L.C 運轉電流	A	700 (604.5)			80			39		
	POWER FACTOR 功率因素	%	90.5			91			91.9		
	EFFICIENCY 效率	%	93.5			93.5			94		
	INPUT 輸出功率	kW	417.1			417.1			414.9		
	START METHOD 啟動方式	--	STAR-DELTA STARTING			STAR-DELTA STARTING			AUTO COMPENSATED STARTING		
TR-G700H1	WIRING 配管尺寸	mm²	150x3Cx4	3CxCV150x4	(82)x4	50x3C	3CxCV25x2	(54)x2	16x3C	3CxCV16	(70)x1
	OUTPUT 輸出	kW	460			460			460		
	F.L.C 運轉電流	A	822 (709.7)			94			46		
	POWER FACTOR 功率因素	%	90.9			91.3			92.3		
	EFFICIENCY 效率	%	93.5			94			94		
	INPUT 輸出功率	kW	492			489.4			489.4		
	START METHOD 啟動方式	--	STAR-DELTA STARTING			STAR-DELTA STARTING			AUTO COMPENSATED STARTING		

Electrical Characteristics and Electric Wire Capacity for Standard-efficiency Model
(標準效率型電器特點及電器配線容量)

50Hz

UNIT	DIVISION	UNITS	3,300V CLASS			6,600V CLASS		
			SUBSTATION	STARTER	CONDUIT	SUBSTATION	STARTER	CONDUIT
TR-G800H1	WIRING 配管尺寸	mm²	70x3C	3CxCV70x1	(70)x1	35x3C	3CxCV35x1	(70)x1
	OUTPUT 輸出	kW	520			520		
	F.L.C 運轉電流	A	106			52		
	POWER FACTOR 功率因素	%	91.7			92.5		
	EFFICIENCY 效率	%	94			94		
	INPUT 輸出功率	kW	553.2			553.2		
	START METHOD 啟動方式	--	REACTOR			AUTO COMPENSATED STARTING		
TR-G900H1	WIRING 配管尺寸	mm²	70x3C	3CxCV70x1	(70)x1	35x3C	3CxCV35x1	(70)x1
	OUTPUT 輸出	kW	590			590		
	F.L.C 運轉電流	A	119			59		
	POWER FACTOR 功率因素	%	92.1			93		
	EFFICIENCY 效率	%	94			94.5		
	INPUT 輸出功率	kW	627.7			624.3		
	START METHOD 啟動方式	--	REACTOR			AUTO COMPENSATED STARTING		
TR-G1000H1	WIRING 配管尺寸	mm²	95x3C	3CxCV95x1	(82)x1	35x3C	3CxCV35x1	(70)x1
	OUTPUT 輸出	kW	650			650		
	F.L.C 運轉電流	A	131			65		
	POWER FACTOR 功率因素	%	92.3			93.2		
	EFFICIENCY 效率	%	94			94.5		
	INPUT 輸出功率	kW	691.5			687.8		
	START METHOD 啟動方式	--	STAR-DELTA STARTING			AUTO COMPENSATED STARTING		
TR-E1200H1	WIRING 配管尺寸	mm²	120x3C	3CxCV120x1	(92)x1	35x3C	3CxCV35x1	(70)x1
	OUTPUT 輸出	kW	780			780		
	F.L.C 運轉電流	A	157			77		
	POWER FACTOR 功率因素	%	92.7			93.5		
	EFFICIENCY 效率	%	94			94.5		
	INPUT 輸出功率	kW	829.8			825.4		
	START METHOD 啟動方式	--	REACTOR			AUTO COMPENSATED STARTING		

Associated Control Operation Diagram (配線示意圖)

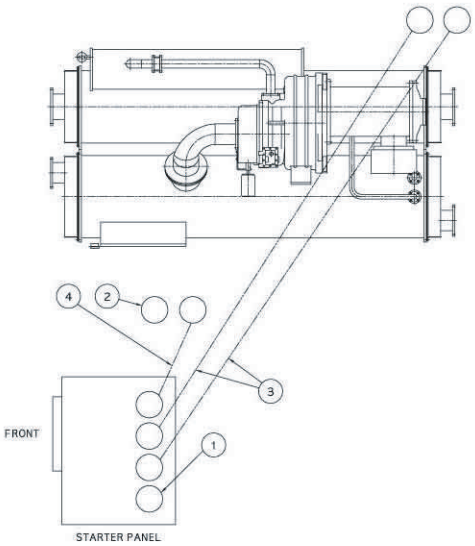

INSTALL FIELD WIRING IN ACCORDANCE WITH THE WIRING DIAGRAMS AND APPLICABLE ELECTRICAL CORDS. TABLE SHOWS THE ARRANGEMENT OF ELECTRICAL PIPING AND WIRING.

①	ELECTRICAL SOURCE FOR MAIN POWER	3Ø 3W 380V, 440V, 3.3kV, 6.6kV
②	ELECTRICAL SOURCE FOR AUXILIARY	3Ø 3W 220V, 380V, 440V
③	POWER WIRING FOR STARTER - MOTOR	REFER TO TABLE BELOW
④	CONTROL WIRING OF STARTER - CONTROL PANEL	1) CW-SB 1.5mm² x 8C 2) CW 1.5mm² x 6C (3C:SPARE) 3) CONDUIT PIPE : 28 x 2

Electrical Characteristics and Electric Wire Capacity

Electrical Characteristics and Electric Wire Capacity for Standard-efficiency Model
（標準效率型電器特點及電器配線容量）

60Hz

UNIT	DIVISION	UNITS	380V(440V) CLASS			3,300V CLASS			6,600V CLASS		
			SUBGTATION	STARTER	CONDUIT	SUBGTATION	STARTER	CONDUIT	SUBGTATION	STARTER	CONDUIT
TR-G200H1	WIRING 配管尺寸	mm²	185x3C	3CxCV100x2	(70)x2	16x3C	3CxCV16x2	(54)x2	16x3C	3CxCV16	(70)x1
	OUTPUT 輸出	kW	140			140			140		
	F.L.C 運轉電流	A	251 (216.8)			29			14		
	POWER FACTOR 功率因素	%	91.4			91.4			91.3		
	EFFICIENCY 效率	%	92.6			92.6			92.6		
	INPUT 輸出功率	kW	151.2			151.2			151.2		
	START METHOD 啟動方式	--	STAR-DELTA STARTING			STAR-DELTA STARTING			AUTO COMPENSATED STARTING		
TR-G300H1	WIRING 配管尺寸	mm²	240x3C	3CxCV100x2	(70)x2	16x3C	3CxCV16x2	(54)x2	16x3C	3CxCV16	(70)x1
	OUTPUT 輸出	kW	210			210			210		
	F.L.C 運轉電流	A	373 (322.1)			43			22		
	POWER FACTOR 功率因素	%	91.9			91.9			91.9		
	EFFICIENCY 效率	%	93.2			93.2			93.2		
	INPUT 輸出功率	kW	225.3			225.3			225.3		
	START METHOD 啟動方式	--	STAR-DELTA STARTING			STAR-DELTA STARTING			AUTO COMPENSATED STARTING		
TR-G400H1	WIRING 配管尺寸	mm²	185x3Cx2	3CxCV185x2	(92)x2	25x3C	3CxCV16x2	(54)x2	16x3C	3CxCV16	(70)x1
	OUTPUT 輸出	kW	260			260			260		
	F.L.C 運轉電流	A	461 (398.1)			53			26		
	POWER FACTOR 功率因素	%	91.9			91.9			91.9		
	EFFICIENCY 效率	%	93.2			93.2			93.4		
	INPUT 輸出功率	kW	279			279			278.4		
	START METHOD 啟動方式	--	STAR-DELTA STARTING			STAR-DELTA STARTING			AUTO COMPENSATED STARTING		
TR-G500H1	WIRING 配管尺寸	mm²	240x3Cx2	3CxCV240x2	(104)x2	25x3C	3CxCV16x2	(54)x2	16x3C	3CxCV16	(70)x1
	OUTPUT 輸出	kW	330			330			330		
	F.L.C 運轉電流	A	577 (498.3)			67			34		
	POWER FACTOR 功率因素	%	92.1			92.1			92.1		
	EFFICIENCY 效率	%	94.3			93.8			93.5		
	INPUT 輸出功率	kW	349.9			351.8			352.9		
	START METHOD 啟動方式	--	STAR-DELTA STARTING			STAR-DELTA STARTING			AUTO COMPENSATED STARTING		
TR-G600H1	WIRING 配管尺寸	mm²	150x3Cx4	3CxCV150x4	(82)x4	50x3C	3CxCV25x2	(54)x2	16x3C	3CxCV16	(70)x1
	OUTPUT 輸出	kW	390			390			390		
	F.L.C 運轉電流	A	683 (589.9)			79			39		
	POWER FACTOR 功率因素	%	92.2			92.2			92.2		
	EFFICIENCY 效率	%	94.1			93.8			93.8		
	INPUT 輸出功率	kW	414.5			415.8			415.8		
	START METHOD 啟動方式	--	STAR-DELTA STARTING			STAR-DELTA STARTING			AUTO COMPENSATED STARTING		
TR-G700H1	WIRING 配管尺寸	mm²	185x3Cx4	3CxCV185x4	(92)x4	50x3C	3CxCV25x2	(54)x2	16x3C	3CxCV16	(70)x1
	OUTPUT 輸出	kW	460			460			460		
	F.L.C 運轉電流	A	801 (691.8)			93			46		
	POWER FACTOR 功率因素	%	92.3			92.3			92.3		
	EFFICIENCY 效率	%	94.5			94.1			93.8		
	INPUT 輸出功率	kW	486.8			488.8			490.4		
	START METHOD 啟動方式	--	STAR-DELTA STARTING			STAR-DELTA STARTING			AUTO COMPENSATED STARTING		

Electrical Characteristics and Electric Wire Capacity for Standard-efficiency Model
（標準效率型電器特點及電器配線容量）

60Hz

UNIT	DIVISION	UNITS	3,300V CLASS			6,600V CLASS		
			SUBSTATION	STARTER	CONDUIT	SUBSTATION	STARTER	CONDUIT
TR-G800H1	WIRING 配管尺寸	mm 2	70x3C	3CxCV70x1	(70)x1	35x3C	3CxCV35x1	(70)x1
	OUTPUT 輸出	kW	520			520		
	F.L.C 運轉電流	A	105			53		
	POWER FACTOR 功率因素	%	92.3			92.3		
	EFFICIENCY 效率	%	94.1			93.8		
	INPUT 輸出功率	kW	552.6			554.4		
	START METHOD 啟動方式	--	REACTOR STARTING			AUTO COMPENSATED STARTING		
TR-G900H1	WIRING 配管尺寸	mm 2	70x3C	3CxCV70x1	(70)x1	35x3C	3CxCV35x1	(70)x1
	OUTPUT 輸出	kW	590			590		
	F.L.C 運轉電流	A	118			59		
	POWER FACTOR 功率因素	%	92.4			92.4		
	EFFICIENCY 效率	%	94.3			94		
	INPUT 輸出功率	kW	625.7			627.7		
	START METHOD 啟動方式	--	REACTOR			AUTO COMPENSATED STARTING		
TR-G1000H1	WIRING 配管尺寸	mm 2	95x3C	3CxCV95x1	(82)x1	35x3C	3CxCV35x1	(70)x1
	OUTPUT 輸出	kW	650			650		
	F.L.C 運轉電流	A	130			65		
	POWER FACTOR 功率因素	%	92.5			92.5		
	EFFICIENCY 效率	%	94.5			94.5		
	INPUT 輸出功率	kW	687.8			687.8		
	START METHOD 啟動方式	--	REACTOR STARTING			AUTO COMPENSATED STARTING		
TR-E1200H1	WIRING 配管尺寸	mm 2	120x3C	3CxCV120x1	(92)x1	35x3C	3CxCV35x1	(70)x1
	OUTPUT 輸出	kW	780			780		
	F.L.C 運轉電流	A	156			78		
	POWER FACTOR 功率因素	%	92.5			92.5		
	EFFICIENCY 效率	%	94.5			94.5		
	INPUT 輸出功率	kW	825.4			825.4		
	START METHOD 啟動方式	--	REACTOR STARTING			AUTO COMPENSATED STARTING		

Associated Control Operation Diagram（配線示意圖）

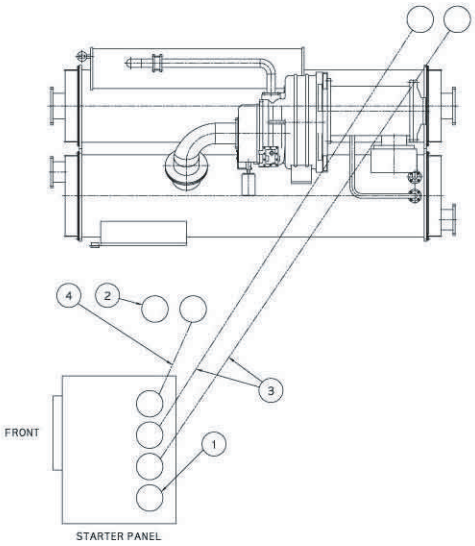

INSTALL FIELD WIRING IN ACCORDANCE WITH THE WIRING DIAGRAMS AND APPLICABLE ELECTRICAL CORDS. TABLE SHOWS THE ARRANGEMENT OF ELECTRICAL PIPING AND WIRING.

①	ELECTRICAL SOURCE FOR MAIN POWER	3Ø 3W 380V, 440V, 3.3kV, 6.6kV
②	ELECTRICAL SOURCE FOR AUXILIARY	3Ø 3W 220V, 380V, 440V
③	POWER WIRING FOR STARTER - MOTOR	REFER TO TABLE BELOW
④	CONTROL WIRING OF STARTER - CONTROL PANEL	1) CW-SB 1,5mm^2 x 8C 2) CW 1,5mm^2 x 6C (3C:SPARE) 3) CONDUIT PIPE : 28 x 2

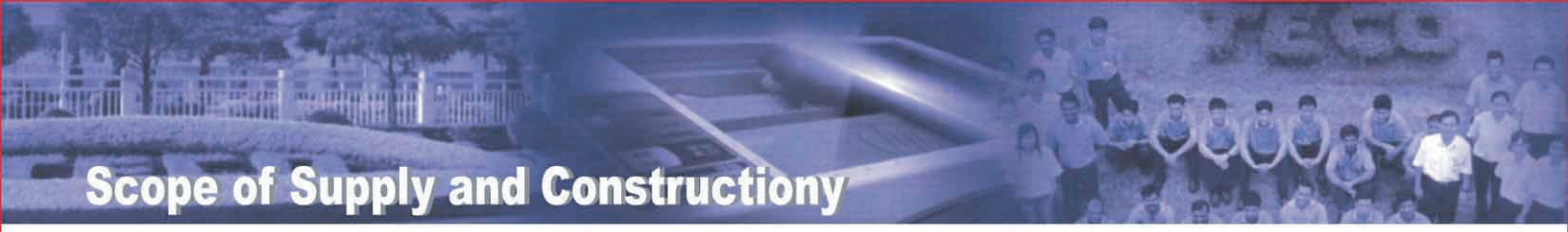

Scope of Supply and Construction（責任分界）

Item（項目）	Detail（內容）	Construction Classification（區分）		Remarks（備註）
		Finetec Century	Consumer（消費者）	
Chiller Unit 機器主機	Compressor (Including Motor) 壓縮機（包括電機）	○		
	Heat Exchanger（熱交換器）	○		
	Lubrication System（潤滑系統）	○		
	Chiller Assembly（冷水機組機）	○		
Electrical Device 電氣配件	Control Panel（控制盤）	○		
	Automatic Control Device（自動監控裝置）	○		
	Safety Device（安全裝置）	○		
	Color & Touch Display（彩色觸摸屏）	○		
	Starter（啟動盤）	○		
Painting 外觀塗裝	Chiller Main Body（機器主機）	○		
	Starter Panel（啟動盤）	○		
Supply Material 供給品	Refrigerant（冷媒）	○		1st Initial Charged Amount（出廠充填量）
	Lubrication Oil（潤滑油）	○		1st Initial Charged Amount（出廠充填量）
	Vibration isolation Rubber（防震橡膠）	○		1SET（1組）
	Base Plate（安裝基礎板）	○		1SET（1組）
	User Manual（使用說明書）	○		
Test 試驗	Leak Test（氣密性測試）	○		
	Control Test（控制測試）	○		
	Internal Voltage,Insulation Test 絕緣耐壓試驗	○		
	In-house Operation Test（進行測試）	○		
Unit Transportation and Carry-in 引進	Machine Delivery and Intake（機器運送及定位）	○		Deliver to installation site or foundation.（送至安裝現場或定位）
	On-site Assembly（現場組裝）	○		In case of split delivery 分開運送時
	Test Operation and Operation Supervise 試運行及運行指導	○		
Construction Scope 建設範圍	Insulation（機體保溫）	○		
	Base Construction（基礎座）		○	
	Ceiling Hook Installation（吊鈎設置）		○	
	Piping Construction（水配管）		○	External piping work for chilled water, cooling water, and drain 冷水、冷卻水，排水等外部配管
	High-Voltage wiring and piping（高壓電配線、配管）		○	Wiring and piping work between starter panel and motor 啟動盤與電機之間的配線、配管
	Low-Voltage wiring and piping（低壓電配線、配管）		○	Wiring and piping work between starter panel and motor 啟動盤與控制盤之間的配線、配管
	Grounding（接地線配置）		○	
	Chilled Water, Cooling Water Pump Inter-lock Wiring 冷水、冷卻水泵 連鎖保護配線		○	
	Structural Restoration 搬運定位時建築物改變部分的恢復建設		○	


MEMO

註：本規格係根據設計資料，若有變更，則依商品所附說明書記載為準，恕不另行通知。

東元深根台灣、跨足大陸，為您提供最全方位的服務 東莞東成空調設備有限公司：廣東省東莞市黃江鎮精成科技園區精成一路 TEL：(86)(769)8363-2222

東元空調冷凍製品全國營業區所

台北營業區：台北市南港區園區街3-1號10樓	(02) 66159111	新竹營業所：新竹市中華路四段402號	(03) 5396493
空調服務課：台北縣新莊市思源路34號	(02) 22983667	台中營業區：台中市工業區二三路26號	(04) 23592696
花蓮營業所：花蓮市美工路55號	(03) 8226175	嘉義營業所：嘉義市八德路292號	(05) 2324414
台東營業所：台東市正氣北路369-1號	(089) 318446	台南營業所：台南市安平工業區新平路2號	(06) 2650191
蘭陽營業所：宜蘭縣五結鄉五濱路一段233號	(03) 9907000	高雄營業區：高雄市仁武鄉鳳仁路397號	(07) 3741306
中壢營業所：中壢市新生路800號	(03) 4626168		

堅持品質的專業服務

24小時服務專線 **0800-281-208**

http://www.teco.com.tw

http://www.tecohome.com.tw

東元集團

空調事業部

空調營業處：台北市南港區園區街3-1號10樓 TEL：(02)6615-9111

TR-0804 2008年09月